THREE PHASE INDUCTION MOTOR

# OUTLINE DIMENSIONS

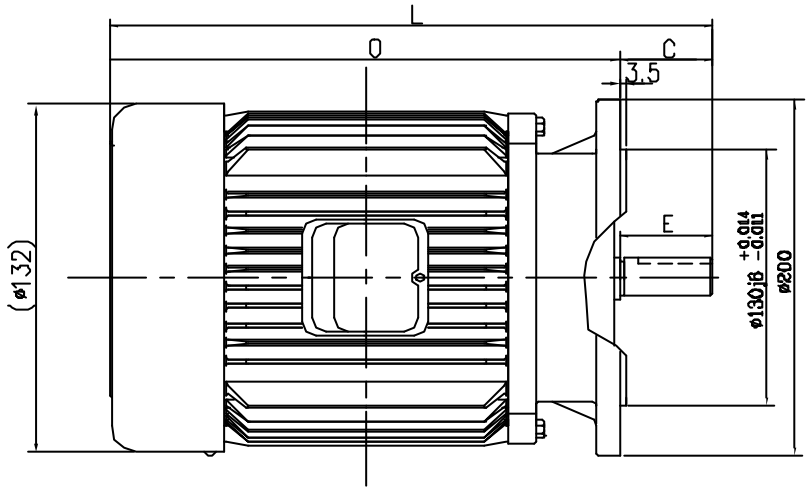


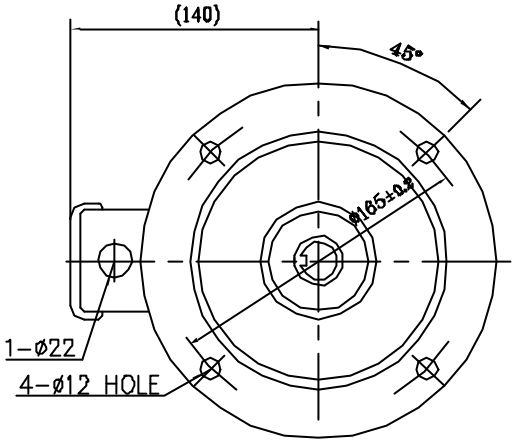


NOTE

1. 3 PHASE SQUIRREL CAGE INDUCTION MOTOR
2. TYPE : TOTALLY ENCLOSED FAN COOLED, FLANGE-MOUNTING FOOTLESS MOTOR.
3. ALL DIMENSIONS ARE IN MILLIMETERS.
4. THE TOLERANCE FOR THE KEY DIMENSIONS IS IN ACCORDANCE WITH KS B 1311-84

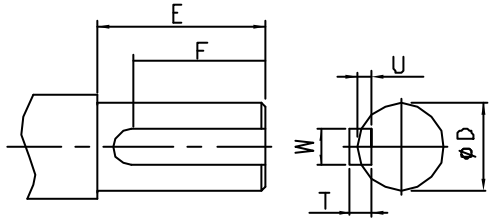


DETAIL OF SHAFT END

OTHER SPECIAL FEATURES

1. CAST IRON FRAME AND END BRACKETS.
2. STAINLESS STEEL NAME PLATE WITH CONNECTION DIAGRAM.
3. STEEL FAN COVER AND TERMINAL BOX.

| FRAME NO. | OUTPUT(KW) | | | | DEGREES OF PRO TECTION | RATING | L | O | C | E | F | W | T | U | ø D |
|---|---|---|---|---|---|---|---|---|---|---|---|---|---|---|---|
| | 2P | 4P | 6P | 8P | | | | | | | | | | | |
| 80 (FF165) | 0.75 | 0.4/0.75 | 0.4/0.75 | – | IP44 | CONT. | 293 | 253 | 40 | 40 | 32 | 6 | 6 | 3.5 | 19j6 |
| | | | | | | | | | | | | | | | |

| DRAWING NO. | | |
|---|---|---|
| PREPEARED | CHECKED | APPROVED |
| '00.05.26 D.H.KAM | '00.05.26 H.J.KIM | '00.05.26 J.H. KIM |

LG·OTIS